INYT0630F Series

SMD Molding Power Inductor

◆ Features

1、Magnetically shielded construction, low DC resistance。
2、The use of magnetic iron powder ensure capability for large current。
3、Low audible core noise。
4. Ideal for DC-DC converter applications in hand held personal computer and etc。
5、Frequency Range: up to 3.0MHz。
6、RoHS compliant。

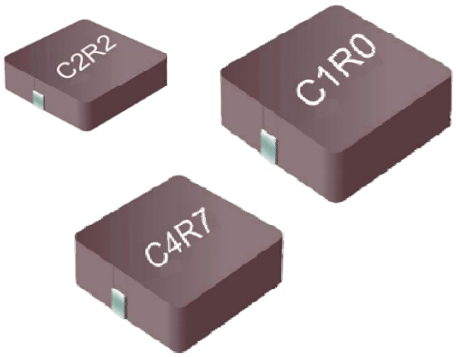

◆ Applications

1、Smart phone、MID。
2. Next-generation mobile devices with multifunction such as adding color TV and digital movie cameras。
3、Flat-screen TVs, blue-ray disc recorders, set top box。
4、Notebooks, desktop computers, servers, graphic cards。
5. Portable gaming devices, personal navigation systems, personal multimedia devices。
6、Automotive systems。
7、Telecomm base stations。

◆ Lead Free Part Numbering

INYT	0630	H	100	M	T
(1)	(2)	(3)	(4)	(5)	(6)

(1) Series Type
(2) Dimension。A X C
(3) Material Code
(4) Inductance。2R2=2.2μH；
100=10μH。101=100μH
(5) Inductance Tolerance。M=±20%, Y=±30%
(6) Packaging：packed in embossed carrier tape

External Dimensions Unit(mm)

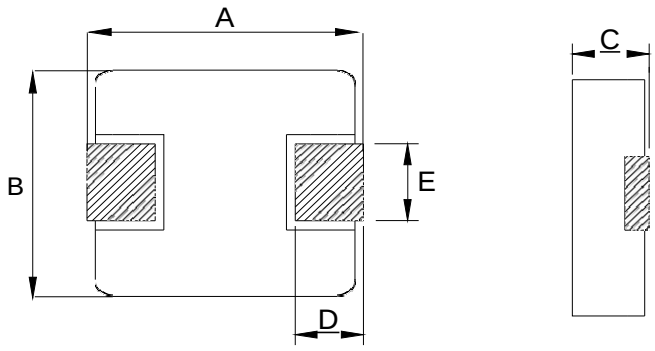

Recommended Land Pattern(mm)

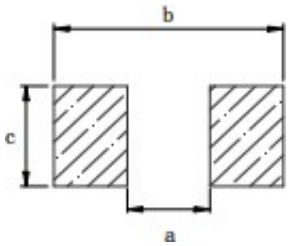

◆ Dimensions

Series	A±0.3 (mm)	B±0.2 (mm)	C (mm)	D±0.3 (mm)	E±0.3 (mm)	a typ (mm)	b typ (mm)	c typ (mm)
INYT0630F	7.0	6.6	2.0 Max	1.6	3.0	3.7	8.4	3.5

◆ Specification

Part Number	INDUCTANCE Lo(μH)	Rdc (mΩ) Max	Test a condition	HEAT RATING CURRENT(Idc) DC AMPS1 (Typ.)	SATURATION CURRENT(Isat) DC AMPS2 (Typ.)
INYT0630F Series					
INYT0630FR22MT	0.22	3.0	100KHz/1V	24.0	34.0
INYT0630FR33MT	0.33	3.5	100KHz/1V	21.0	25.0
INYT0630FR47MT	0.47	4.1	100KHz/1V	18.0	20.0
INYT0630FR56MT	0.56	4.5	100KHz/1V	16.5	18.0
INYT0630FR68MT	0.68	5.3	100KHz/1V	16.0	17.0
INYT0630FR82MT	0.82	6.0	100KHz/1V	14.0	16.0
INYT0630F1R0MT	1.0	7.4	100KHz/1V	12.0	15.0
INYT0630F1R5MT	1.5	12.1	100KHz/1V	12.0	12.0
INYT0630F2R2MT	2.2	15.0	100KHz/1V	9.5	10.0
INYT0630F3R3MT	3.3	22.0	100KHz/1V	8.5	9.5
INYT0630F4R7MT	4.7	33.0	100KHz/1V	6.0	9.0
INYT0630F5R6MT	5.6	42.0	100KHz/1V	5.5	6.5
INYT0630F6R8MT	6.8	48.0	100KHz/1V	5.0	6.0
INYT0630F8R2MT	8.2	60.0	100KHz/1V	5.0	5.5
INYT0630F100MT	10	68.0	100KHz/1V	4.5	5.5
INYT0630F150MT	15	113	100KHz/1V	3.0	4.0
INYT0630F220MT	22	170	100KHz/1V	2.5	3.0
INYT0630F330MT	33	270	100KHz/1V	2.0	2.5
INYT0630F470MT	47	385	100KHz/1V	1.5	2.0

NOTES:

1. DC current (Idc) that will cause an approximate △T of 40℃
2. DC current (Isat) that will cause Lo to drop approximately 20%
3. All test data is referenced to 25℃ ambient
4. Operating Temperature Range -55℃ to +150℃
5. The part temperature (ambient + temp rise) should not exceed 150℃ under the worst operating conditions. Circuit design, component placement, PWB trace size and thickness, airflow and other cooling provisions all affect

the part temperature. Part temperature should be verified in the end application.

◆ Wave Soldering

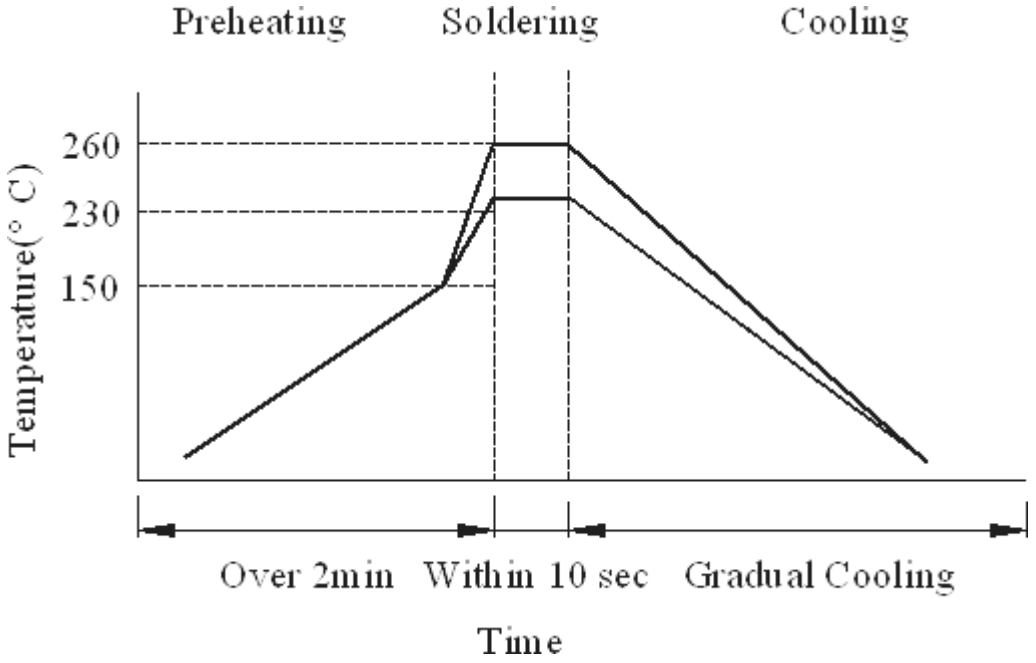

◆ Hand soldering

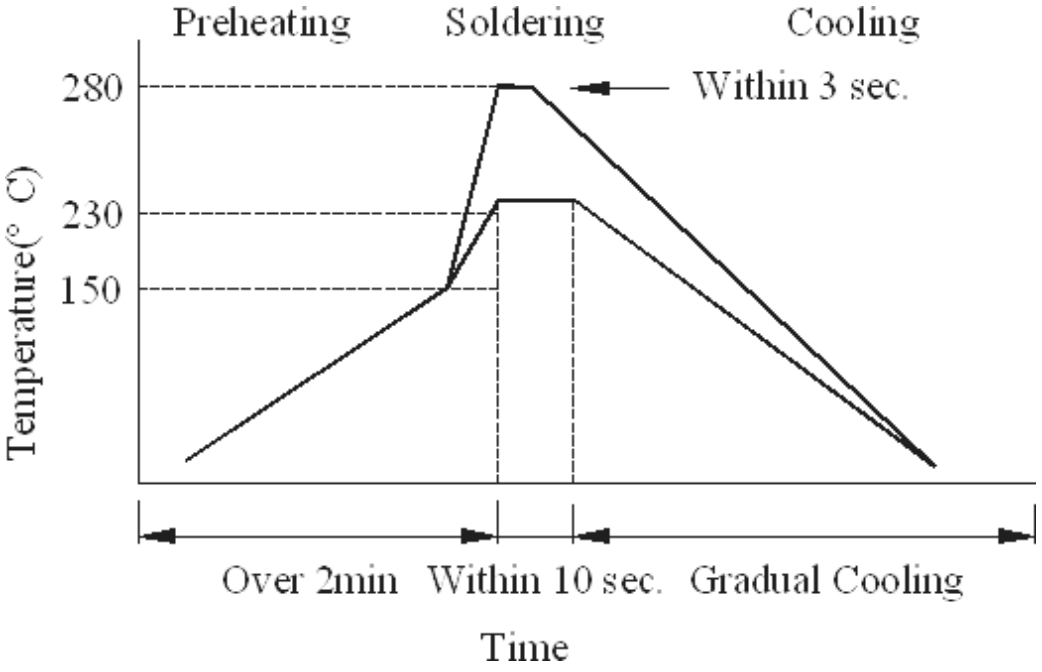

◆ Reliability Mechanical

ITEM 項目	Requirements要求	Test Conditions測試條件
Operating Temp 工作溫度	-55℃~+125℃	/
Storage Temp 儲存溫度	-45℃~+125℃	/
Temperature & Humidity Test 溫濕度測試	1.無機械損傷。No mechanical damage. 2.阻抗變化在±30%內，電感量變化在±10%內，Q 值變化在±30%內。 Impedance change within±30%；Inductance change within±10%；Quality factor change within±30%.	測試溫度（Test Temperature ）：85˚C 測試濕度（Test Humidity）：85%RH 測試持續時間（Test Duration ）：144 hours
Thermal shock 熱衝擊	1.無機械損傷。No mechanical damage. 2.阻抗變化在±30%內，電感量變化在±10%內，Q 值變化在±30%內。 Impedance change within±30%；Inductance change within±10%；Quality factor change within±30%.	步驟 1（Step 1）：-45±3˚C 30±3Min 步驟 2（Step 2）：125±3˚C 30±3Min 循環次數（Number of cycle） ：100cycles
Low Temperature Test 低溫測試	1.無機械損傷。No mechanical damage. 2.阻抗變化在±30%內，電感量變化在±10%內，Q 值變化在±30%內。 Impedance change within±30%；Inductance change within±10%；Quality factor change within±30%.	測試溫度（Test Temperature ）：-55±2 ˚C 測試持續時間（Test Duration ）：24 hours
High Temperature Test 高溫測試	1.無機械損傷。No mechanical damage. 2.阻抗變化在±30%內，電感量變化在±10%內，Q 值變化在±30%內。 Impedance change within±30%；Inductance change within±10%；Quality factor change within±30%.	測試溫度（Test Temperature ）：125±2 ˚C 測試持續時間（Test Duration ）：24 hours
Humidity load resistance 耐潮濕	1.無機械損傷。No mechanical damage. 2.阻抗變化在±30%內，電感量變化在±10%內，Q 值變化在±30%內。 Impedance change within±30%；Inductance change within±10%；Quality factor change within±30%.	通過額定電流，40±2˚C，90~95%RH 下放置 500 小時後，置於室溫下 24 小時後測量。At 40±2˚C，90~95%RH,load rated current for 500H,Measured at room ambient after 24H.
Resistance to solder heat 耐焊性	1.焊接過程中器件無破損。 No damage such as cracks should be caused in chip element. 2.至少有 75%的端電極被焊錫覆蓋。 More than 75% of the terminal electrode shall be covered with mew solder. 3.阻抗變化在±30%內，電感量變化在±10%內，Q 值變化在±30%內。 Impedance change within±30%；Inductance change within±10%；Quality factor change within±30%.	預熱溫度（Preheat temperature） ：100~150˚C 預熱時間（Preheat time）：60sec. 焊接溫度（Solder temperature） ：260±10˚C 浸焊時間（Dipping time）10±0.5sec.
Solder ability 可焊性	1.至少有 75%的端電極被焊錫覆蓋。 More than 75% of the terminal electrode shall be covered with mew solder. 2.阻抗變化在±30%內，電感量變化在±10%內，Q 值變化在±30%內。 Impedance change within±30%；Inductance change within±10%；Quality factor change within±30%.	預熱溫度（Preheat temperature） ：100~150˚C 預熱時間（Preheat time）：60sec. 焊接溫度（Solder temperature） ：260±10˚C 浸焊時間（Dipping time）10±0.5sec.
Reflow soldering 回流焊	至少有50%的端電極被焊錫覆蓋。 More than 50% of the terminal electrode shall be covered with solder.	預熱溫度（Preheat temperature） ：50˚C 預熱時間（Preheat time）：60sec. 焊接溫度（Solder temperature） ：260˚C 浸焊時間（Dipping time）10sec.Max
Drop Test 跌落測試	2.無機械損傷。No mechanical damage. 2.阻抗變化在±30%內，電感量變化在±10%內，Q 值變化在±30%內。 Impedance change within±30%；Inductance change within±10%；Quality factor change within±30%.	跌落高度（Drop height）：1m 跌落面（Drop plane）：混凝土水平面
Vibration 抗震性	1.無機械損傷。No mechanical damage. 2.阻抗變化在±30%內，電感量變化在±10%內，Q 值變化在±30%內。 Impedance change within±30%；Inductance change within±10%；Quality factor change within±30%.	頻率（Frequency ）：10Hz~55Hz~10Hz 振幅（Amplitude ）：1.52mm 方向和時間：X/Y/Z 各振動 2 小時，共計 6 小時 Direction & time:2 H /axis ， total 6 hours 。
Mechanical shock test 機械衝擊測試	1.無機械損傷。No mechanical damage. 2.阻抗變化在±30%內，電感量變化在±10%內，Q 值變化在±30%內。 Impedance change within±30%；Inductance change within±10%；Quality factor change within±30%.	脈衝波形（Pulse shape ）：半正弦波 Half-sine Waveform 加速度（Acceleration ）：100 g 脈衝持續時間（Pulse Duration ）：11 ms 衝擊方向（Shock direction ）：± X,± Y,± Z axis 衝擊次數（Shock times ）：3 次/ 方向 3times/direction.
Salt Spraying Test 鹽霧測試	1. 表面無氧化：No surface oxidation。 2. 阻抗變化在±30%內，電感量變化在±10%內，Q 值變化在±30%內。 Impedance change within±30%；Inductance change within±10%；Quality factor change within±30%.	試驗介質（Testing Medium）：5%氯化鈉溶液。5% Sodium Chloride Solution 。 試驗溫度（Testing Temperature）：35±2 ˚C 試驗持續時間（Testing Duration ）：20 hours

Packaging Information

(1) Tape Packaging Dimensions（Unit：mm）

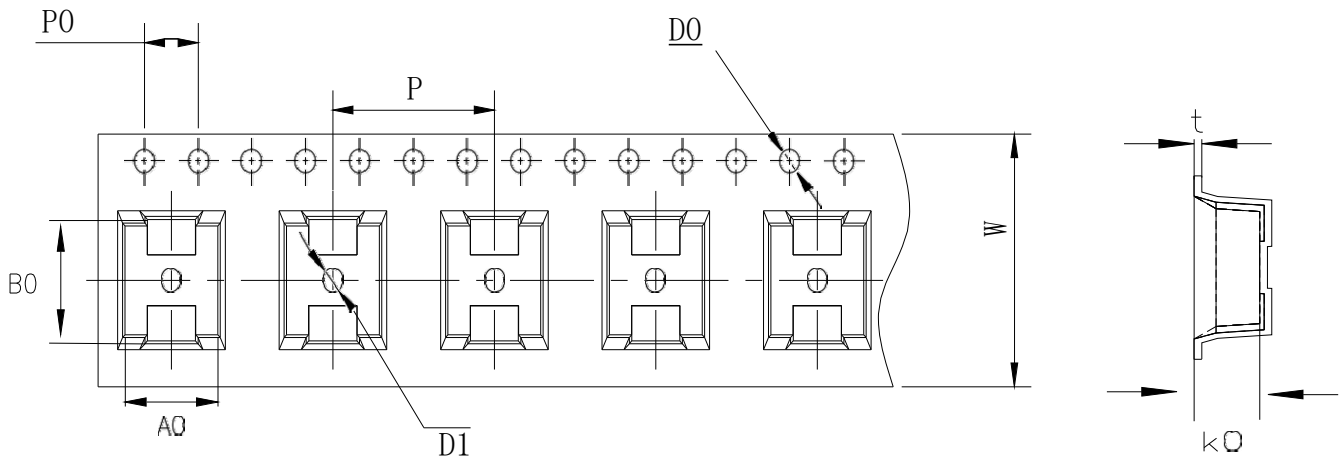

Type	Tape dimensions (mm)											
	W	P	P0	P2	D0	D1	T	A0	B0	K0	E	F
INYT0630F	16 ±0.3	12 ±0.1	4 ±0.1	2 ±0.1	1.5 ±0.1	1.5 ±0.1	0.35 ±0.05	6.9 ±0.1	7.5 ±0.1	3.3 ±0.1	1.75 ±0.1	7.5 ±0.1

Taping Drawings (UNIT:mm)

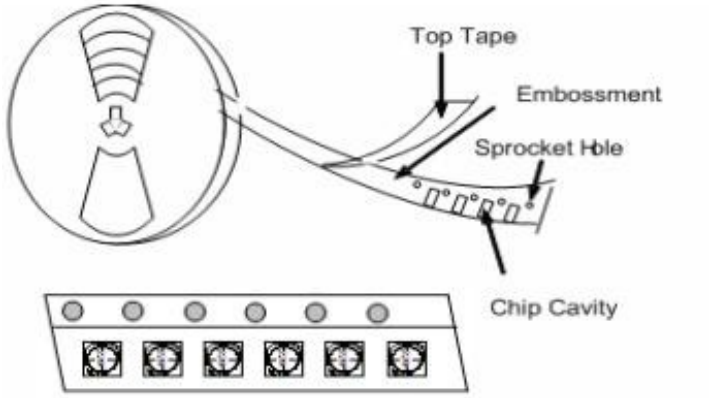

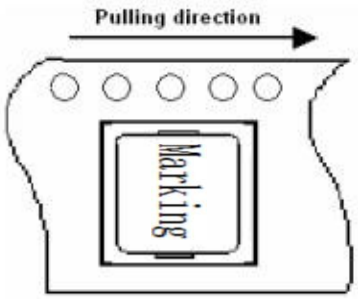

(2) Reel Dimensions（Unit：mm）

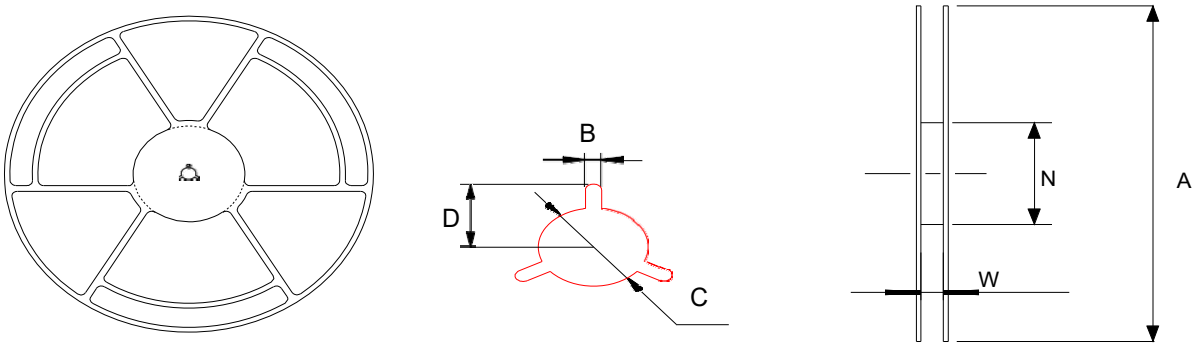

A	W	N	B	C	D
330+2.0	16.8+0.2	97+0.5	2.2+0.5	13.2±0.2	10.75±0.25

(3) Packaging Quantity(PCS)

Type	Standard Quantity		
	Reel	Inner box	Carton box
INYT0630F	1500 pcs / reel	3Reel / box (4500 pcs)	4 Middle boxes, (18000 pcs)

(4) Peel force of top cover tape

The peel speed shall be about 300mm/minute

The peel force of top cover tape shall be between 0.1 to 1.3 N

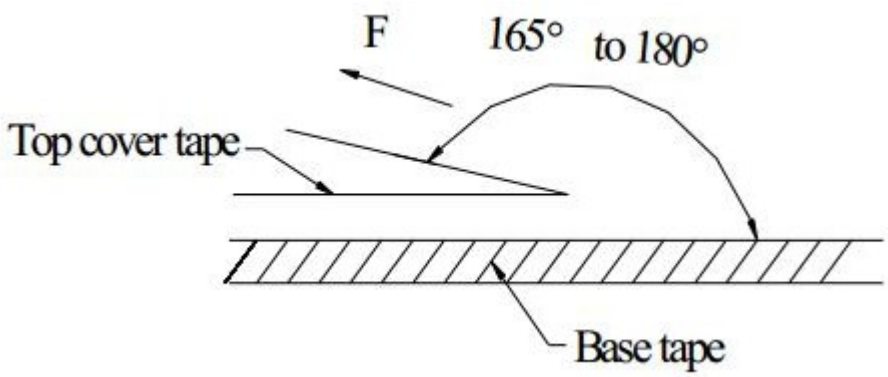

(5) Reel Label

Label on the reel

- Customer's part Number
- Lot Number
- Quantity
- date code

Shipping Label

- Customer's part Number
- Manufacturer's part Number
- Quantity
- date code

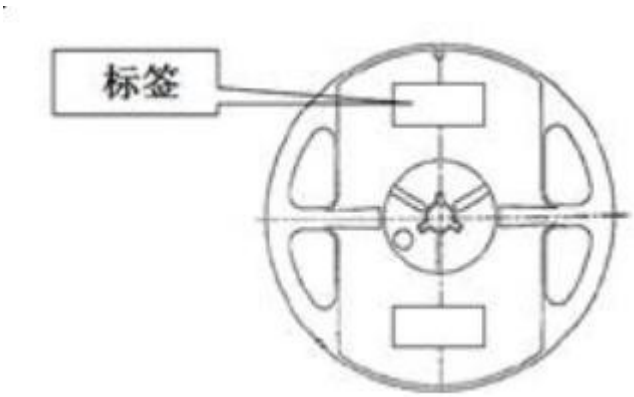

(6) Inner Box

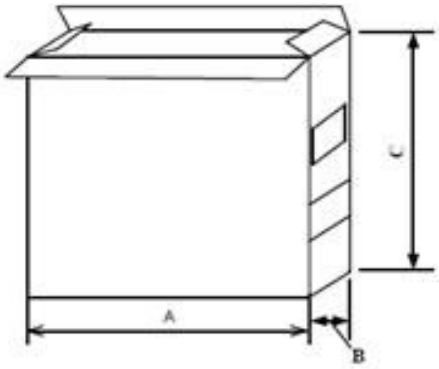

Packaging type	A(mm)	B(mm)	C(mm)
lnner box	335	70	340

(7) Carton

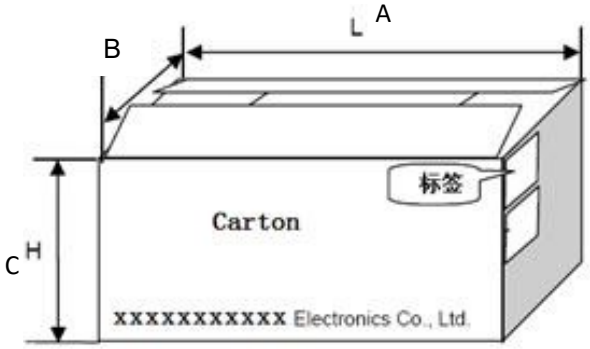

Packaging type	A(mm)	B(mm)	B(mm)
type	360	360	360