Indac ELECTRONICS CORP.

Total solution partner for EMI,Power and RF indactors

SPECIFICATION FOR APPROVAL

Customer : ----------

Date : 2023/8/23

Customer P/N: ----------

Rev No. : A

Indac P/N : INYT201610 系列

1.MECHANICAL & DIMENSIONS

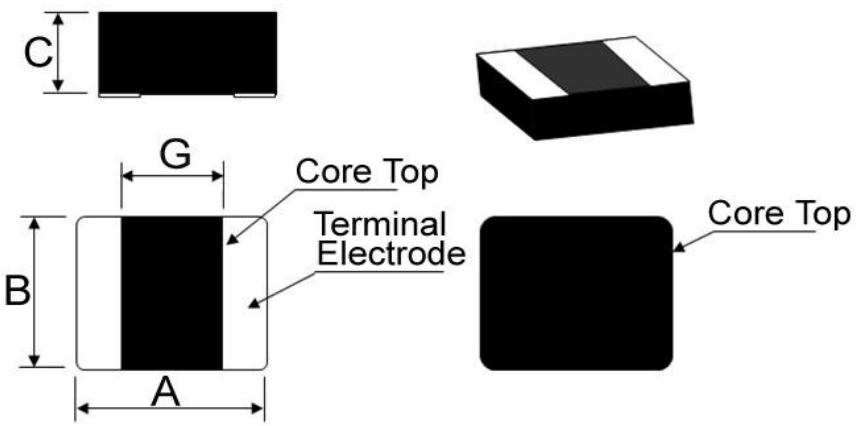

(UNIT: mm)

A	2.0±0.2
B	1.6±0.2
C	1.0Max
G	0.6±0.2

REMARK

NO Marking

TEST INSTRUMENTS

4287A

TH2512A

6375+6220

2.TEMPERATURE RATING:

Operating	-55℃~ +125℃(Including self-temperaturerise)

3.PRODUCT IDENTIFICATION:

INYT 201610 F 1R0 M T

A B C D E F

A: Product Series.

B: Series number, part size

C: Edition

D: Inductance

E:Inductance Tolerance. (K±10% M±20% T±30%)

F: Packing

PREPARED BY	CHECKED BY	APPROVED BY
mei.li		*haixia.song*

Indac ELECTRONICS CORP.
Total solution partner for EMI,Power and RF indactors

5. Electrical Characteristics

4.ELECTRICAL REQUIREMENTS:

NO	Part Number	Inductance	DC Resistance		Isat(A)		Irms(A)		Marking
		1MHz/0.1V	Max.	Typ.	Max.	Typ.	Max.	Typ.	
	Units	(uH)	mΩ	mΩ	A	A	A	A	
1	INYT201610FR10MT	0.10±20%	12	7	8.5	9.0	8.0	8.5	N/A
2	INYT201610FR15MT	0.15±20%	14	8	8.1	8.7	7.1	7.6	N/A
3	INYT201610FR22MT	0.22±20%	18	11	7.6	8.2	6.4	7.0	N/A
4	INYT201610FR24MT	0.24±20%	19	12	7.5	8.0	6.3	6.8	N/A
5	INYT201610FR33MT	0.33±20%	22	17	6.6	7.0	5.4	5.7	N/A
6	INYT201610FR47MT	0.47±20%	25	22	5.6	6.3	5.1	5.5	N/A
7	INYT201610FR68MT	0.68±20%	32	25	4.8	5.2	4.4	4.6	N/A
8	INYT201610F1R0MT	1.0±20%	43	35	4.3	4.6	4.2	4.5	N/A
9	INYT201610F1R5MT	1.5±20%	100	80	3.0	3.3	2.3	2.6	N/A
10	INYT201610F2R2MT	2.2±20%	130	120	2.9	3.0	2.2	2.5	N/A
11	INYT201610F3R3MT	3.3±20%	170	140	2.0	2.4	1.6	1.7	N/A
12	INYT201610F4R7MT	4.7±20%	220	190	1.9	2.0	1.5	1.6	N/A

Test remarks

1.All test data is referenced to 25 ℃ ambient.

2.Test Condition:1MHz, 1.0Vrms.

3.Irms:DC current (A) that will cause an approximate △T of 40 ℃.

4.Isat:DC current (A) that will cause L0 to drop approximately 30%.

5.Operating Temperature Range -55℃ to + 125℃.

6.The part temperature (ambient + temp rise) should not exceed 125 under ℃ the worst case operating conditions. Circuit design, component placement, PCB trace size and thickness, airflow and other cooling provision all affect the part temperature. Part temperature should be verified in the end application.

7.The rated current as listed is either the saturation current or the heating current depending on which value is lower.

8.Absolute maximum voltage 15VDC.

INDAC ELECTRONIC CORP

Total solution for EMI,Power and RF indactors

PACKAGING

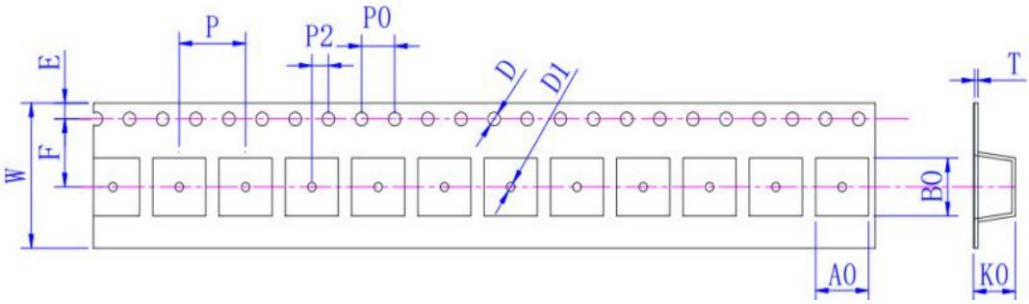

Series	W ±0.30	A0 ±0.05	B0 +0.1/-0	D +0.1/-0	D1 Min	E ±0.10	F ±0.10	K0 ±0.05	P0 ±0.10	P2 ±0.10	P ±0.10	T ±0.05
201610	8.00	2.40	2.80	1.50	1.0	1.75	3.50	1.40	4.00	2.00	4.00	0.23

Dimension of Reel：(Unit: mm)

Type	A ±0.5	B ±0.5	C ±0.5	D ±1
All	178	60	12	1.5

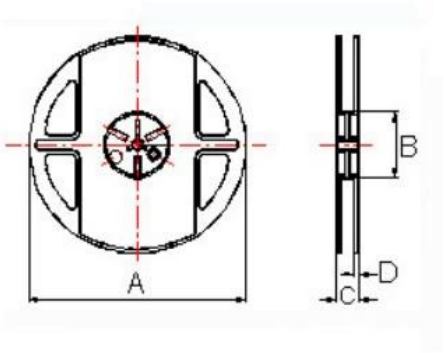

Packaging Quantity

P/N	Chip/Reel
INYT201610F2R2MT	3000

※Storage Conditions

1. Temperature and humidity conditions: -10-+40℃ and 70% RH.
2. Recommended products should be used within 12 months form the time of delivery.
3. The packaging material should be kept where no chlorine or sulfur exists in the air.

For Lead-Free Application

Figure . Re-flow Soldering

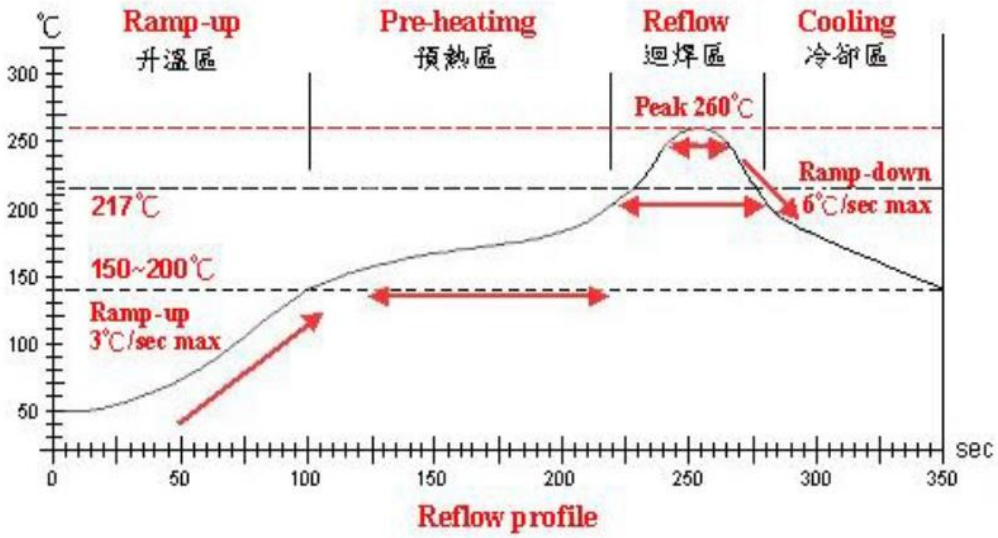

Lead-Free(LF) 標準溫度分析範圍 Refer to J-STD-020C

管制項目 Item.	升溫區 Ramp-up	預熱區 Pre-heatimg	迴焊區 Reflow	Peak Temp	冷卻區 Cooling
溫度範圍 Temp.scope	R.T.~150℃	150℃~200℃	217℃	260±5℃	Peak Temp.~150℃
標準時間 Time spec.	—	60 ~ 180 sec	60 ~ 150 sec	20 ~ 40 sec	—
實際時間 Time result	—	75 ~ 100 sec	90 ~ 120 sec	20 ~ 35 sec	—

NOTE :

1. Re-flow possible times : within 2 times
2. Nitrogen adopted is recommended while in re-flow

INDAC ELECTRONIC CORP

Total solution for EMI,Power and RF indactors

HBESeriesSpecification

Reliability Of Wire Wound Power Inductors

1-1.Mechanical Performances（机械特性试验）

1-1.Mechanical Performance

No	Item	Specification	Test Method
1-1-1	Flexure Strength	The forces applied on the right conditions must not damage the terminal electrode and the metal body	Test device shall be soldered on the substrate Substrate Dimension: 100x40x1.6mm Deflection: 2.0mm Keeping Time: 30sec 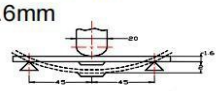
1-1-2	Vibration	Appearance:No damage (for microscope of CASTOR MZ-45 20X) Inductance change shall be within ±20%	Test device shall be soldered on the substrate Oscillation Frequency: 10 to 55 to 10Hz for 1min Amplitude: 1.5mm Time: 2hrs for each axis (X, Y & Z), total 6hrs
1-1-3	Resistance to Soldering Heat	Appearance: No damage More than 75% of the terminal. electrode should be covered with solder. Inductance: within ±20% of initial value	Pre-heating: 150℃, 1min Solder Composition: Sn/Ag3.0/Cu0.5(Pb-Free) Solder Temperature: 260±5℃ Immersion Time: 10±1sec
1-1-4	Solder ability	The electrodes shall be at least 95% covered with new solder coating	Pre-heating: 150℃, 1min Solder Composition: Sn/Ag3.0/Cu0.5(Pb-Free) Solder Temperature: 245±5℃ Immersion Time: 4±1sec
1-1-5	Terminal Strength Test	No split termination 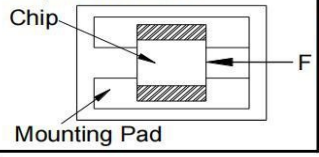	Test device shall be soldered on the substrate, then apply a force in the direction of the arrow. Force : 5N Keeping Time: 10±1sec

1-2.Environmental Performance

No	Item	Specification	Test Method
1-2-1	Temperature Cycle	Appearance: No damage Inductance:within±20% of initial value	One cycle: Step / Temperature (℃) / Time (min) 1 / -40±3 / 30 2 / 25±2 / 3 3 / 125±3 / 30 4 / 25±2 / 3 Total: 100cycles Measured after exposure in the room condition for 24hrs
1-2-2	Humidity Resistance		Temperature: 60±2℃ Relative Humidity: 90 ~ 95% / Time: 500hrs Measured after exposure in the room condition for 24hrs
1-2-3	High Temperature Resistance		Temperature: 85±3℃ Relative Humidity: 0% / Time: 500hrs Measured after exposure in the room condition for 24hrs
1-2-4	Low Temperature Resistance		Temperature: -40±3℃ Relative Humidity: 0% / Time: 500hrs Measured after exposure in the room condition for 24hrs